Customer approval :

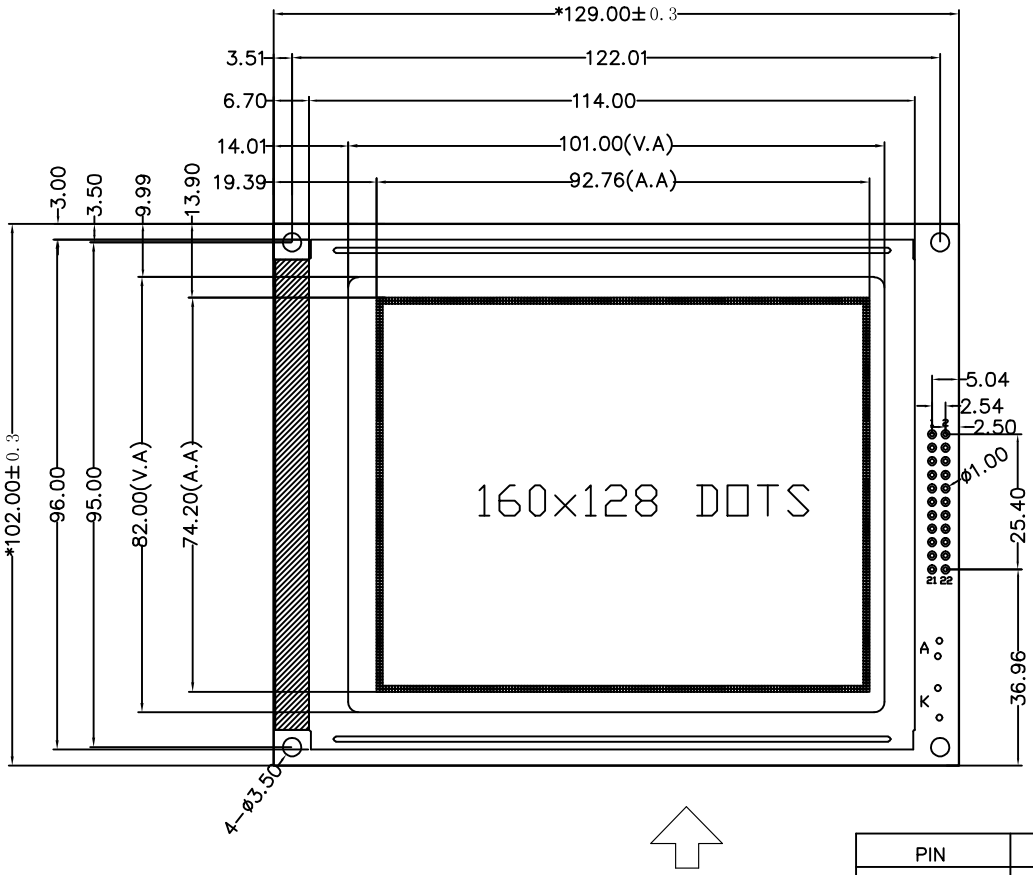

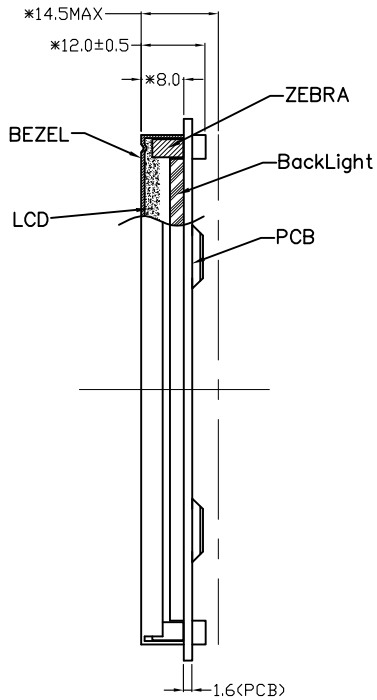

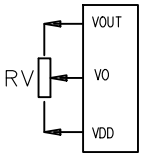

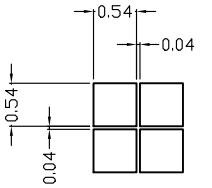

DOTS SIZE

PIN	1	2	3	4	5	6	7	8	9	10	11
CONNECTION	FG	VSS	VDD	NC	NC	/WR	/RD	/CE	C/D	HALT	RST
PIN	12	13	14	15	16	17	18	19	20	21	22
CONNECTION	DB0	DB1	DB2	DB3	DB4	DB5	DB6	DB7	NC	BLA	BLK

Specification:

1). Driving: Duty: 1/128, Bias:1/12, VLCD:13.6V, VDD:5.0V
2). Viewing angle: 6 O'clock
3). Display mode: FSTN/B-W/Positive/Transflective
4). Operating temp.: 0°C~+50°C
Storage temp.: -10°C~+60°C
5). Control IC: T6963 (or compatible)
6). Backlight: Edge White
7). Dimensions with mark "*" are important, with mark "()" are referenced
8). All the raw materials are RoHS compliant

REV	REVISION RECORD	DATE
A	FIRST ISSUE	2013/03/22
B		
C		
D		

TCC®
深圳市三元晶科技有限公司
ShenZhen TCCLCD HI- Tech Co., Ltd.

MODEL NO. 模组型号	SYM160128A1V13-5C5K3LN7R8-B5NIV		GENERAL TOL: 未注公差	± 0.3
APPROVED BY 审核	CHECKED BY 检查	DRAWING BY 绘图	PAGE: 页面 1 OF 1	UNIT: 单位 mm
Liu 2013/03/22	Francis 2013/03/22	Luoxian 2013/03/22	PROJECTION 三角法	