Customer approval

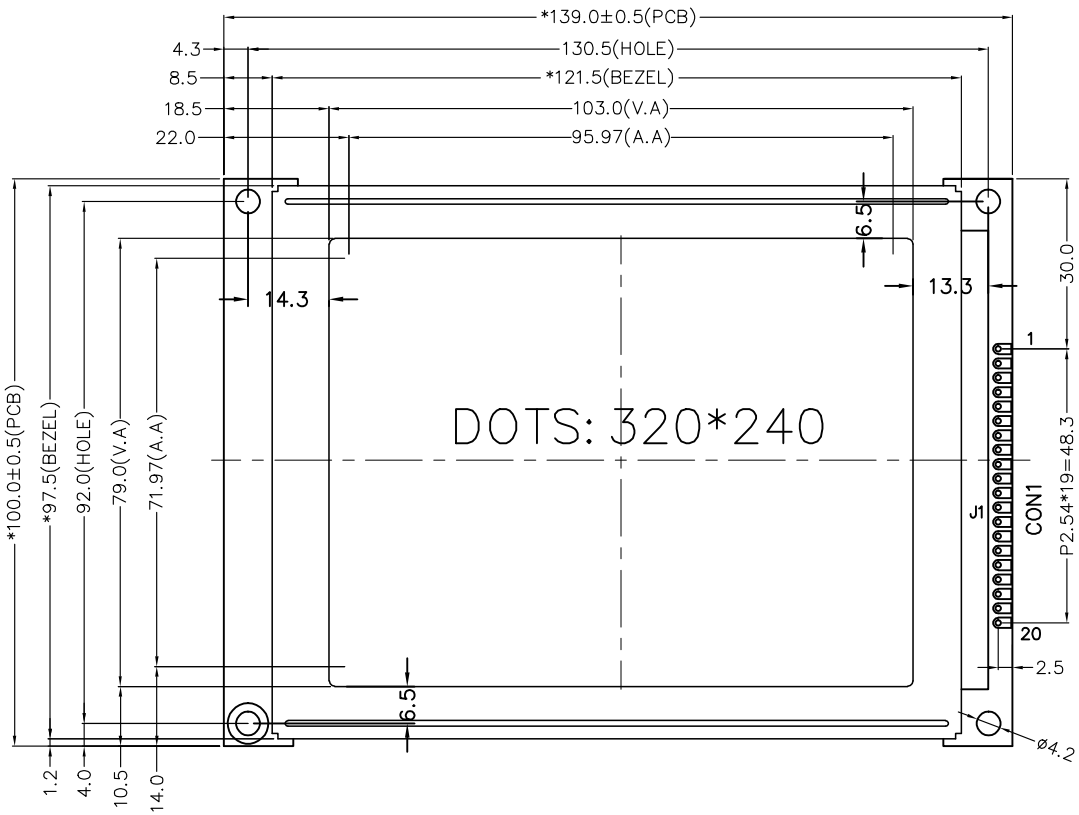

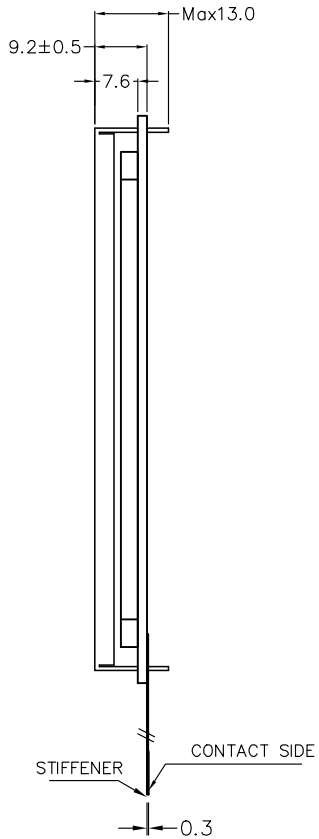

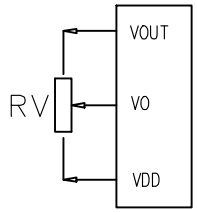

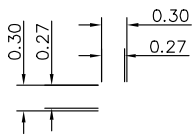

DOTS DETAIL

Specification:

1). Driving: Duty:1/240, Bias:1/16,VOUT:−19.50V,VO:−13.50V,VDD:5.0V
2). Viewing angle: 6 O'clock
3). Display mode: FSTN/Positive/Transmissive
4). Operating temp.: −20°C~+70°C
Storage temp.: −30°C~+80°C
5). IC: RA8835 (or compatible)
6). Backlight: EDGE WHITE
7). Dimensions with mark "*" are important, with mark "()" are referenced
8). All the raw materials are RoHS compliant

J1

PIN	1	2	3	4	5	6	7	8	9	10
CONNECTOR	GND	VDD	VO	/WR	RD	/CS	A0	/RST	DB0	DB1
PIN	11	12	13	14	15	16	17	18	19	20
CONNECTOR	DB2	DB3	DB4	DB5	DB6	DB7	NC	VOUT	BLA	BLK

REV	REVISION RECORD	DATE
A0	First issue	1-14

TCC®
深圳市三元晶科技有限公司
ShenZhen TCC LCD Hi-Tech Co., Ltd.

MODEL NO.	SYM320240C1V11-5C2K1LN3R8		GENERAL TOL: ? ? ? ± ?0.3
APPROVED BY	CHECKED BY	DRAWING BY	PAGE? ?? 1 OF ?? UNIT: mm
			PROJECTION ? ? ?