PAGE:1/1

DATE:

CUSTOMER'S APPROVED:

REV	DESCRIPTION:	DATE
01	*First*	*Feb-24 -2009*

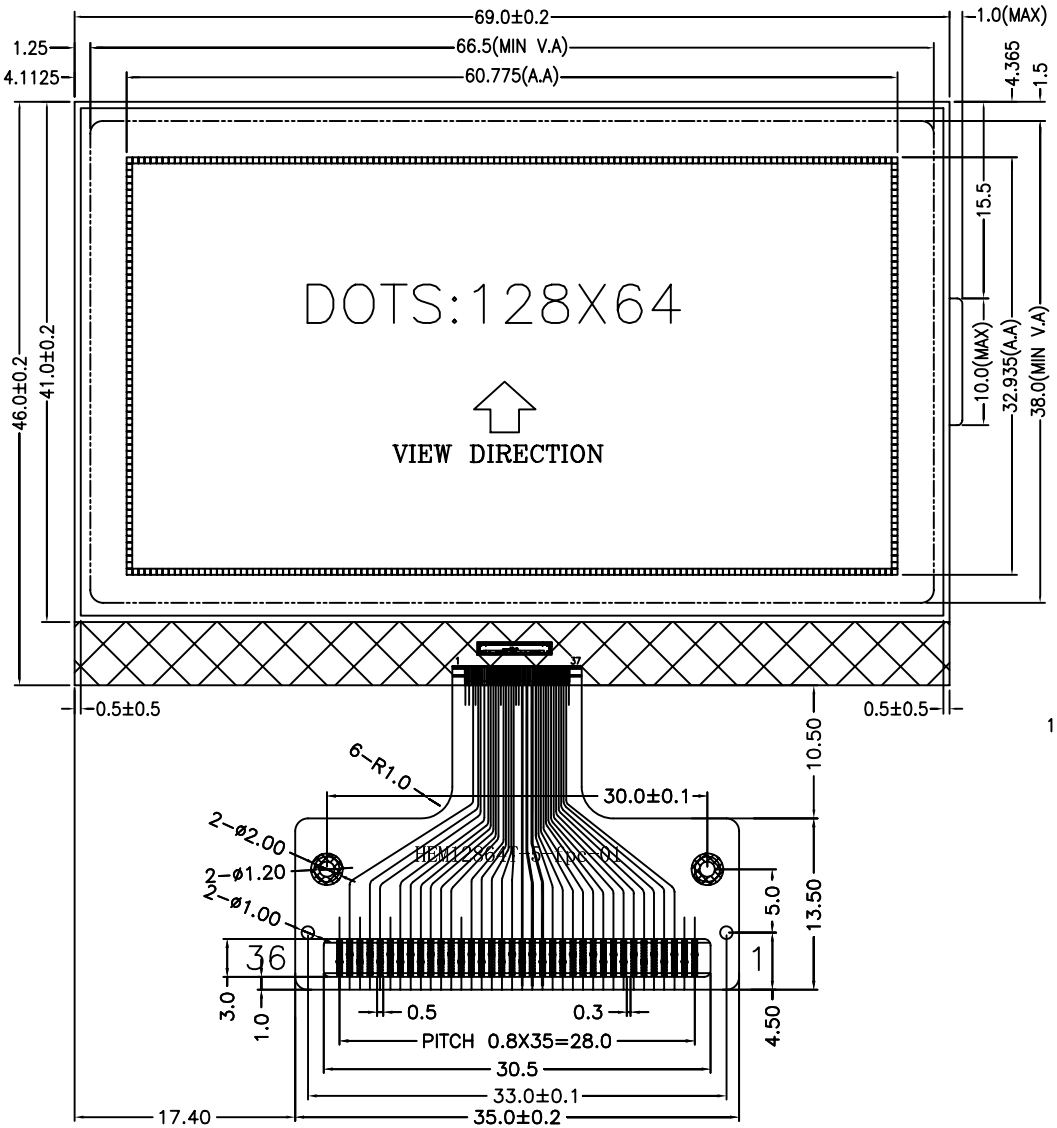

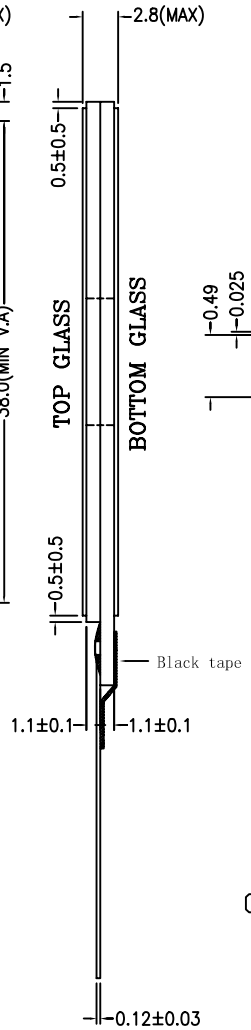

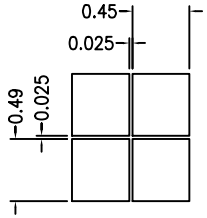

PIN	SYMBOL	PIN	SYMBOL
1	NC	19	C3+
2	NC	20	C1−
3	CS	21	C1+
4	RST	22	C2+
5	RS	23	C2−
6	WR	24	NC
7	RD	25	V1
8	D0	26	V2
9	D1	27	V3
10	D2	28	V4
11	D3	29	V0
12	D4	30	VR
13	D5	31	NC
14	D6	32	C86
15	D7	33	PS
16	VDD	34	NC
17	VSS	35	IRS
18	VOUT	36	NC

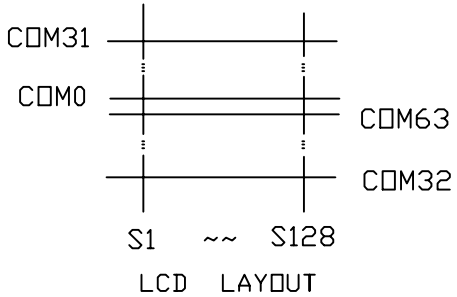

1. DISPLAY TYPE: STN/Yellow-Green
2. DISPLAY MODE: Transmissive/Positive
3. VIEWING DIRECTION: 6:00
4. DRIVER METHOD: 1/64DUTY , 1/9BIAS
5. OPERATING VOLTAGE: VDD=3.3V,VLCD=9.0V
6. OPERATING TEMPERATURE: -10° ~60° C
7. STORAGE TEMPERATURE: -20° ~70° C
8. IC DRIVER: ST7565R /COG

DESCRIPTION:	TCC 深圳市三元晶液晶显示科技有限公司 Tel:075529644102 FAX:27897479		
GENERAL TOL: ±0.2	*MODEL No.* SYG12864T V10		Drw *XQC*
DO NOT SCZLE THIS DRAWING		*Unit: mm*	Chk
			Apv